CSM-3X

Quartz Crystal

The CSM-3X is the miniature low profile resistance weld type SMD quartz crystal. Reduces footprint of CSM-7X (HC-49USX SMD) by 50%.

OPERATING CONDITIONS / ELECTRICAL CHARACTERISTICS

PARAMETERS	CONDITIONS	CSM-3X			UNITS
		MIN	TYP	MAX	
Frequency Range	fo	6.000		40.000	MHz
Frequency Tolerance	at +25°C			± 30	ppm
Frequency Stability ref @+25°C	Standard -10 to +70°C			± 50	ppm
Shunt Capacitance	Co			7	pF
Load Capacitance (CL)	Specify in P/N	10	20	Series	pF
Drive Level				100	µW
Operating Temperature	Standard	-10		+70	°C
Storage Temperature		-40		+85	°C
Aging (First Year)	@ +25°C ±3°C			±5	ppm

EQUIVALENT SERIES RESISTANCE/MODE OF OSCILLATION

FREQUENCY RANGE (MHz)	MODE OF OSC	MAX ESR Ω	FREQUENCY RANGE (MHz)	MODE OF OSC	MAX ESR Ω
6.000 ~ 11.999	Fundamental	200	16.000 ~ 29.999	Fundamental	50
12.000 ~ 15.999	Fundamental	60	30.000 ~ 40.000	Fundamental	

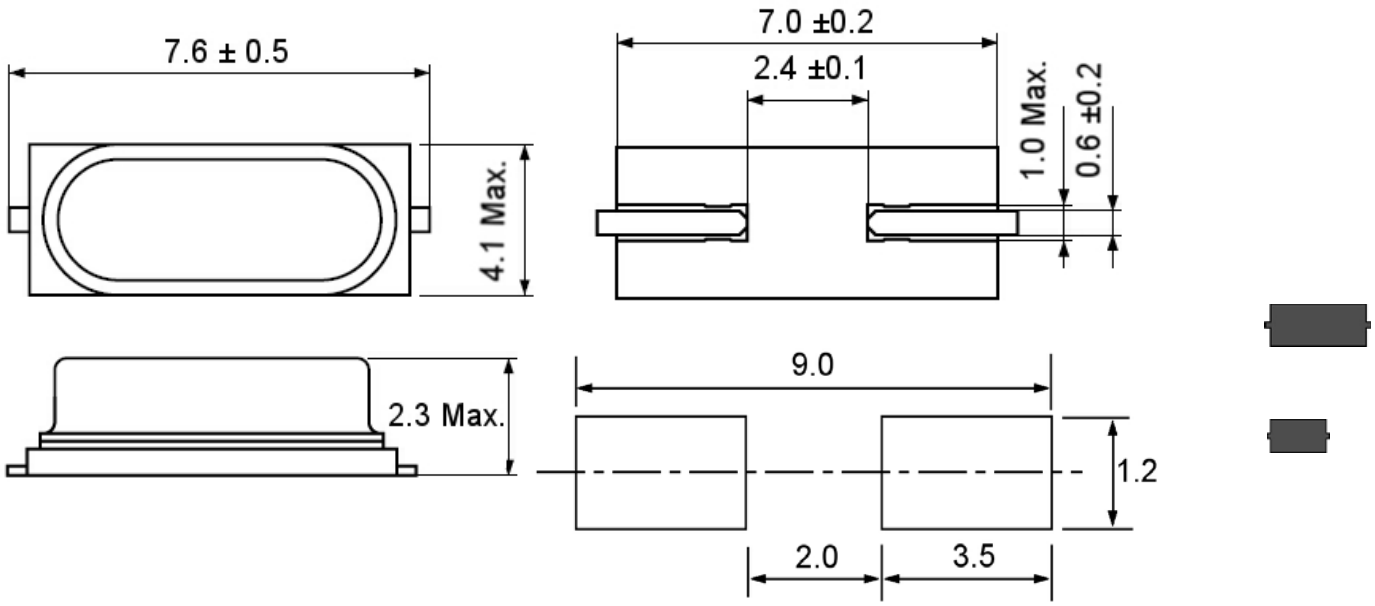

SHENZHEN YIJIN ELECTRONICS CO：LTD TEL：0755-27876565

18924600166 QQ：857950243 http://www.vc-tcxo.com